S01 01	TCP-25B CYLINDER/PISTON/CRANK SHAFT

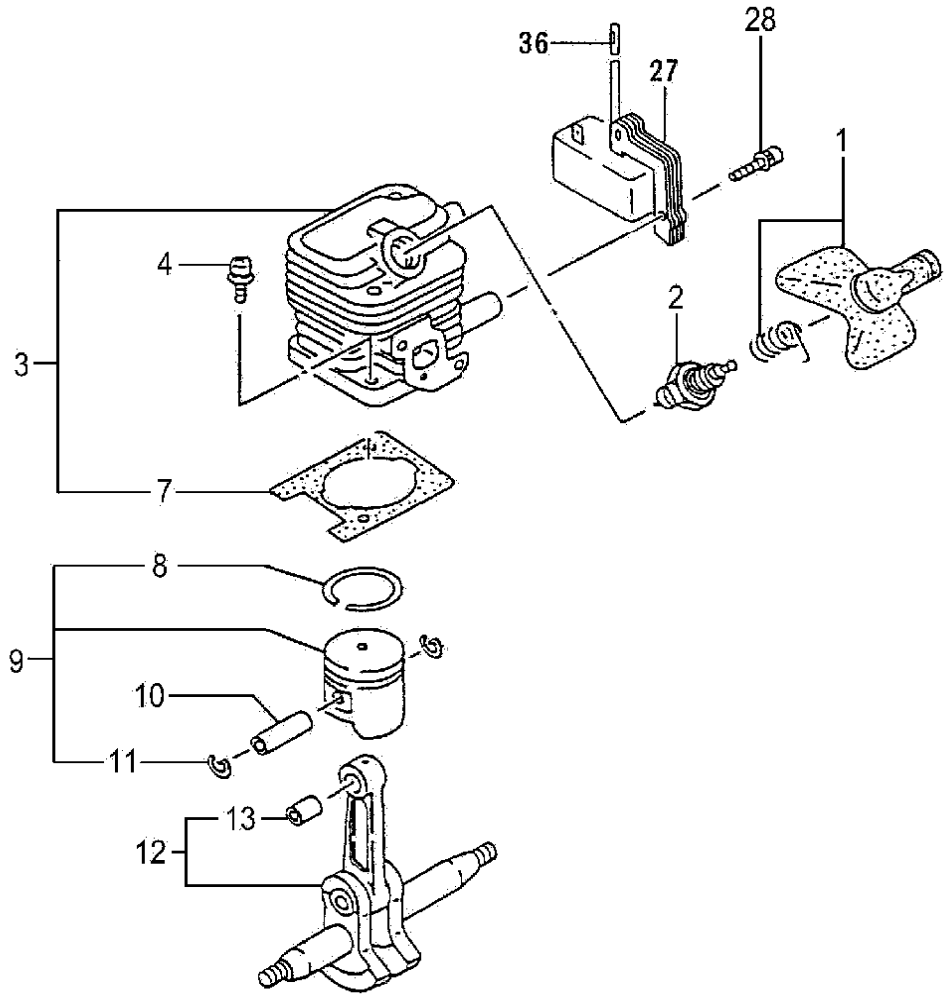

Parts List

Ref.	Part No.	Description	Q'ty	Serial No.
001	157-06500-91	SPARK PLUG CAP ASS'Y	1	
002	018-12710-20	SPARK PLUG BPMR7A	1	
003	001-0650A-90	CYLINDER SET	1	
004	994-61050-184	HEX. HOLE BOLT 5X18/S	2	
007	017-06500-20	CYLINDER GASKET	1	
008	041-00601-21	PISTON RING	1	
009	030-0650A-90	PISTON SET	1	
010	037-06500-20	PISTON PIN	1	
011	039-01620-20	PISTON PIN CIRCLIP	2	
012	046-0650A-80	CRANK SHAFT COMP.	1	
013	999-62081-225	NEEDLE BRG F-810 1.4X8.5	1	
027	167-21532-80	IGNITION COIL COMP.	1	
028	994-16040-186	HIGH TENSION SCREW 4X18WS	2	
036	250-06500-20	INSULATOR TUBE, 50L	1	

S01 02	TCP-25B CRANK CASE

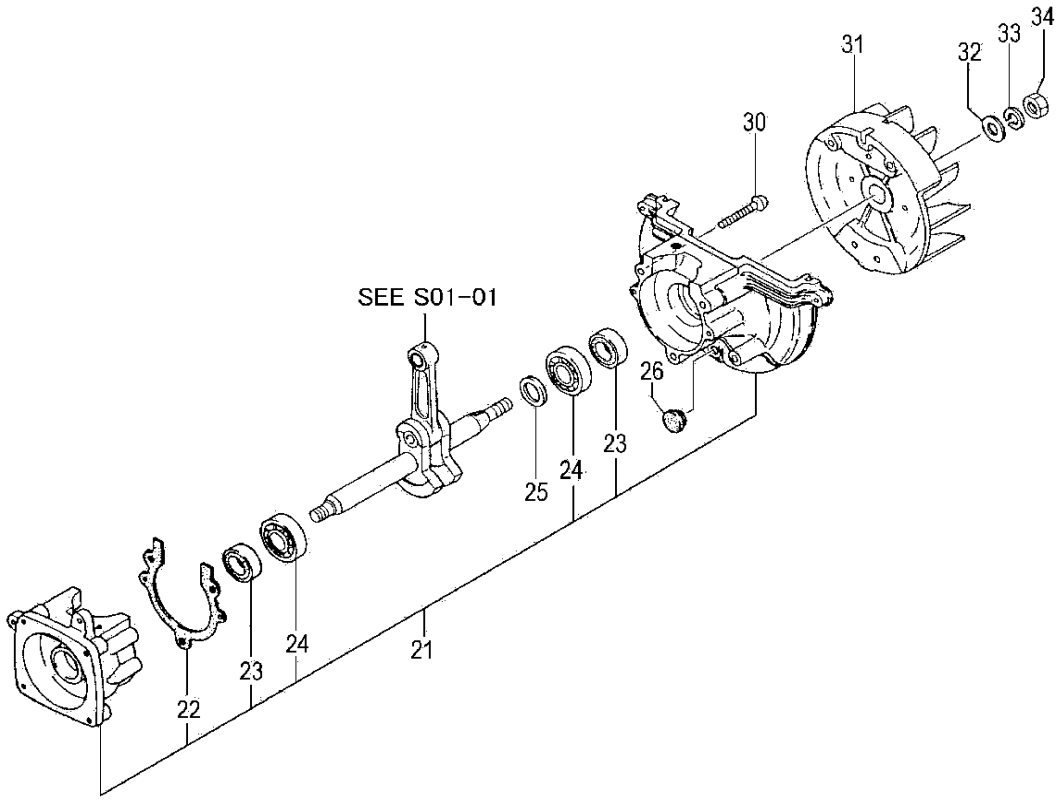

Parts List

Ref.	Part No.	Description	Q'ty	Serial No.
021	072-0650A-90	CRANK CASE ASS'Y	1	
022	090-06500-20	CRANKCASE GASKET	1	
023	999-66122-200	OIL SEAL TB 12227	2	
024	999-61600-115	BALL BEARING 6001 C3	2	
025	330-00200-21	GEAR SHAFT SHIM 0.10	V	
025	330-00200-22	GEAR SHAFT SHIM 0.15	V	
025	330-00200-23	GEAR SHAFT SHIM 0.20	V	
025	330-00200-24	GEAR SHAFT SHIM 0.30	V	
026	599-00601-20	GROMMET	1	
030	994-61050-304	HEX. HOLE BOLT 5X30S	3	
031	155-21523-80	MAGNETO ROTOR COMP.	1	
032	992-01080-011	WASHER 8	1	
033	992-10080-012	S.WASHER 8	1	
034	991-01080-011	HEX. NUT 8	1	

S01 03	TCP-25B ENGINE-1

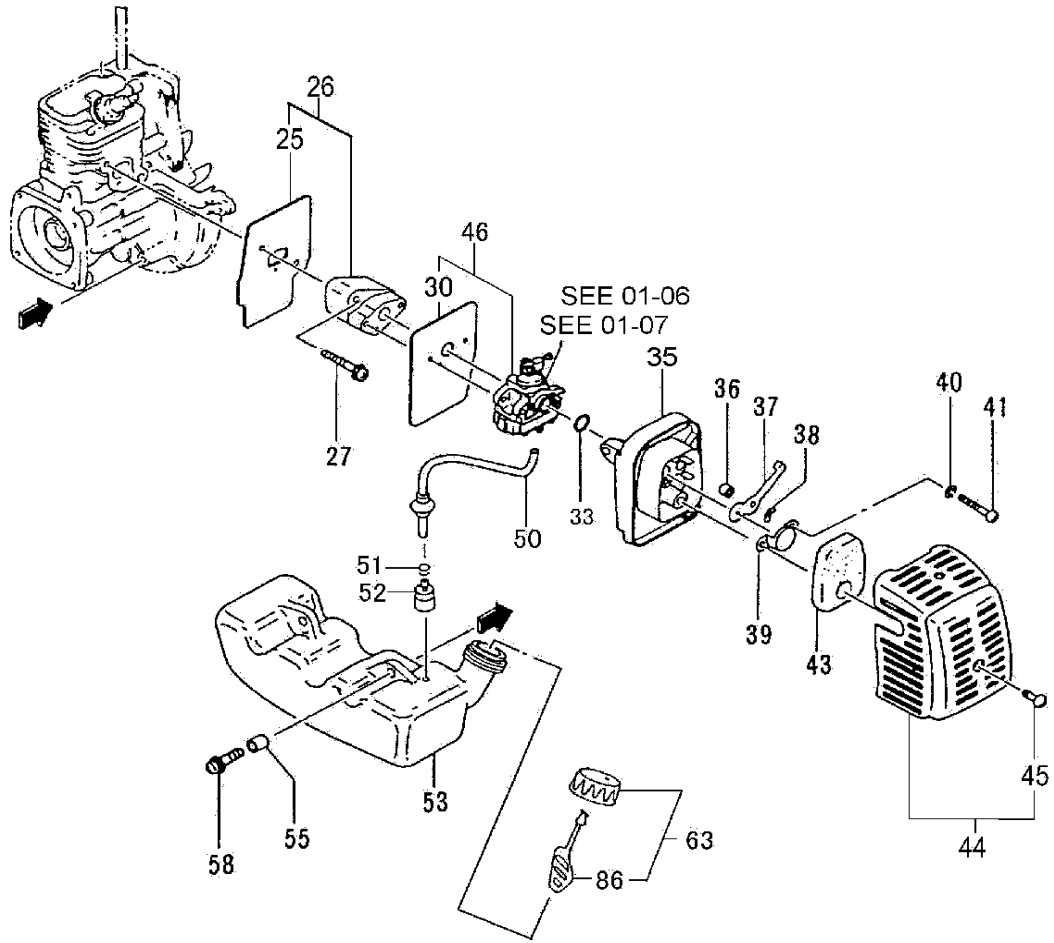

Parts List

Ref.	Part No.	Description	Q'ty	Serial No.
025	403-06500-20	INTAKE PIPE GASKET	1	
026	404-06500-90	CARB. INSULATOR SET,SPARE	1	
027	994-16050-252	SCREW 5X25WS	2	
030	402-06500-20	CARBURETOR GASKET	1	
033	999-67015-000	O-RING P-15	1	
035	423-06500-81	CLEANER BODY COMP.	1	
036	470-06500-20	COLLAR 7.5	2	
037	528-06500-20	CHOKE VALVE	1	
038	992-04080-031	WAVE WASHER 8	1	
039	476-01700-20	BLOW OVER CHECK BOARD	1	
040	992-10050-012	S.WASHER 5	2	
041	990-11050-602	SCREW 5X60	2	
043	446-06500-21	CLEANER SPONGE	1	
044	452-06500-91	CLEANER COVER ASS'Y	1	
045	380-0637C-20	SPECIAL SCREW	1	
046	455-0650A-90	CARBURETOR SET WYL81	1	B045601 -
050	223-06500-90	FUEL PIPE ASS'Y L=130	1	
051	680-00731-20	CLIP, 6.3 DIA.	1	
052	675-04042-80	PUMP FILTER BODY COMP.	1	
053	591-0650A-21	FUEL TANK, VERMILION	1	
055	659-00801-20	COLLAR 5.8	2	
058	994-63050-185	HEX. HOLE BOLT 5X18PS	2	
063	595-00093-90	TANK CAP D ASS'Y ORANGE	1	
086	626-32550-20	TANK CAP CHAIN	1	

S01 04	TCP-25B ENGINE-2

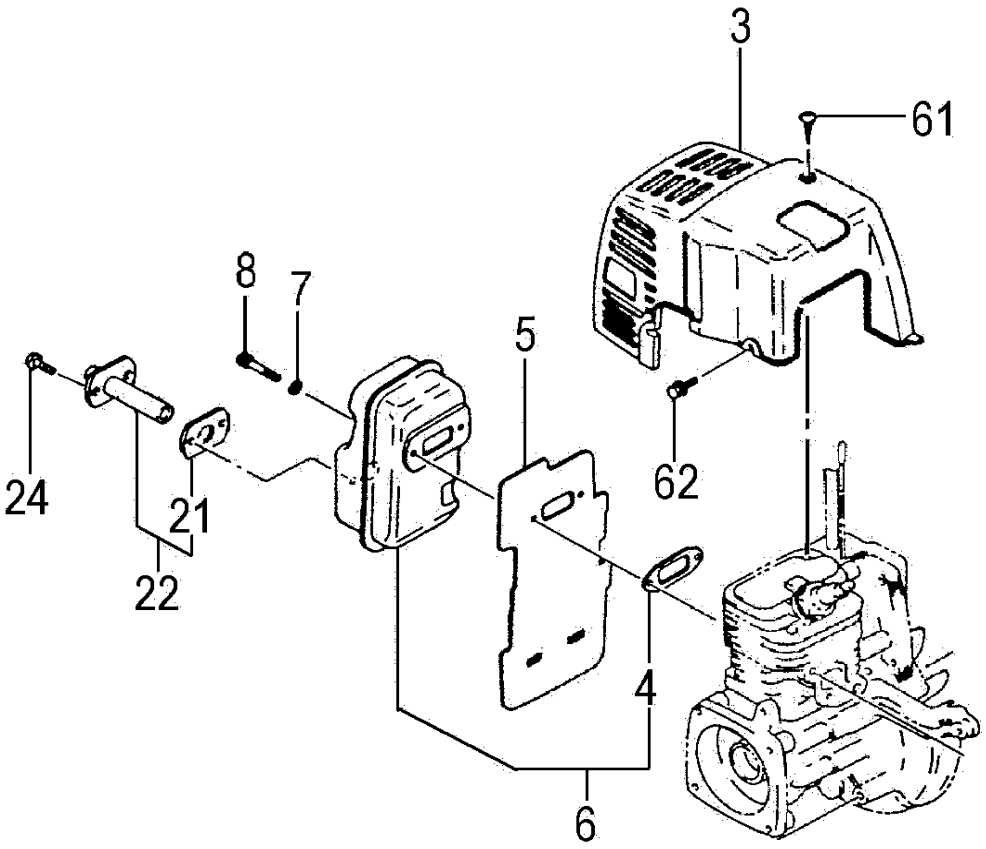

Parts List

Ref.	Part No.	Description	Q'ty	Serial No.
003	738-0650A-20	MUFFLER PROTECTOR	1	
004	737-06500-20	MUFFLER GASKET	1	
005	133-06500-20	HEAT SHIELD	1	
006	704-0650B-90	MUFFLER SET	1	
007	992-01050-011	WASHER 5	2	
008	990-51050-503	HEX. HOLE BOLT 5X50	2	
021	751-04200-20	MUFFLER SPECIAL GASKET	1	
022	721-0650C-90	TAIL PIPE	1	
024	994-14040-081	SCREW 4X8/S	2	
061	990-72045-164	TAPPING SCREW 4.5X16	1	
062	994-25040-128	BOLT 4X12PS	2	

S01 05	TCP-25B RECOIL STARTER

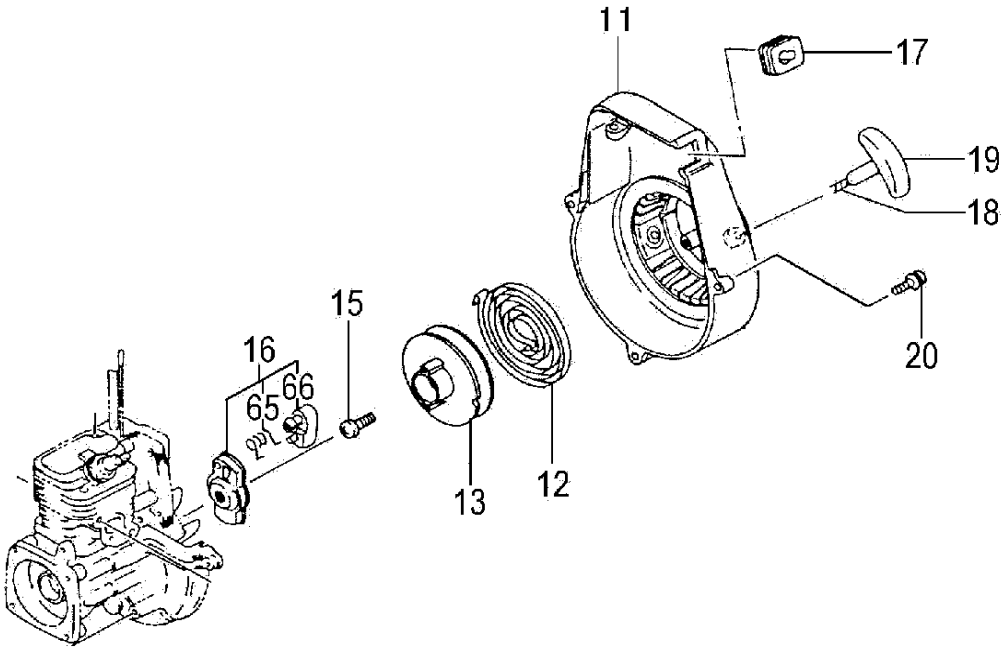

Parts List

Ref.	Part No.	Description	Q'ty	Serial No.
011	112-0650A-80	FANCASE COMP., VERMILION	1	
012	780-06097-20	RECOIL SPRING	1	
013	774-06097-20	STARTER ROPE REEL	1	
015	839-02010-20	SET SCREW	1	
016	798-06500-90	STARTER PULLEY ASS'Y	1	
017	203-0604A-20	GROMMET	1	
018	783-06097-20	STARTER ROPE	1	
019	785-06410-20	STARTER HANDLE	1	
020	994-15040-162	SCREW 4X16/PS	3	
065	790-06097-20	STARTER PAWL SPRING	1	
066	788-06500-20	STARTER PAWL	1	

S01 06	TCP-25B CARBURETOR (SERIAL NO.-B045600)

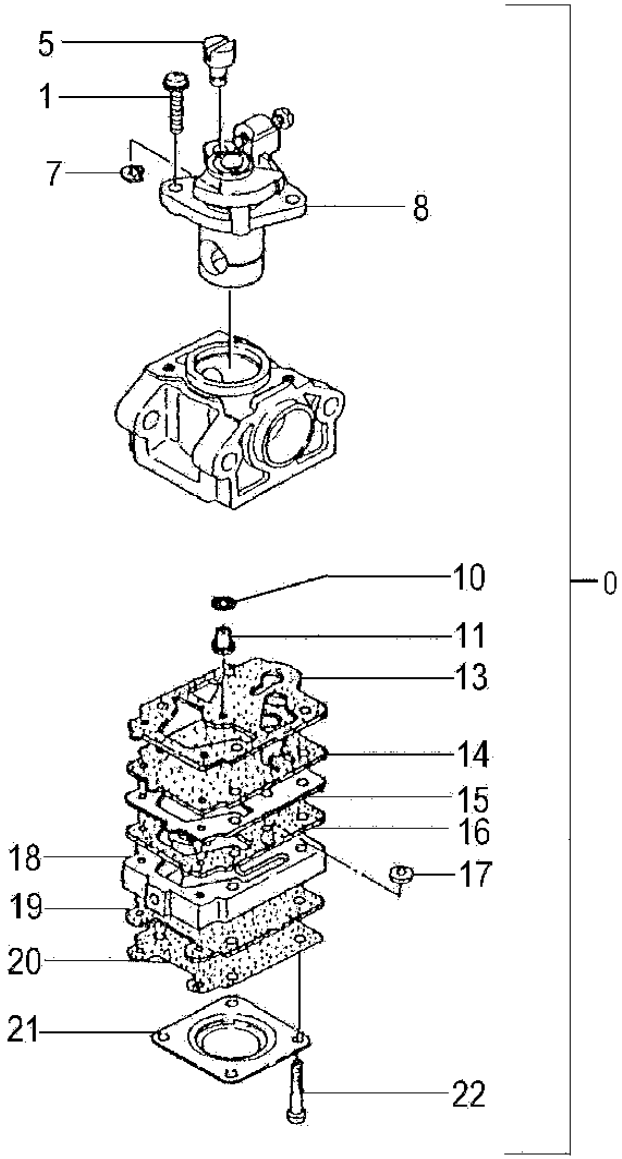

Parts List

Ref.	Part No.	Description	Q'ty	Serial No.
000	455-25146-90	CARBURETOR ASS'Y, WYL-16	1	
001	548-25140-20	THROTTLE SET SCREW	2	
005	539-25120-20	SWIVEL	1	
007	489-25100-20	STOP RING	1	
008	488-25146-80	THROTTLE VALVE COMP.	1	
010	550-25100-20	O-RING	1	
011	599-2000W-41	MAIN JET #41	1	
013	577-25100-20	PUMP GASKET	1	
014	576-25100-20	PUMP DIAPHRAGM	1	
015	523-25100-20	PUMP PLATE	1	
016	522-25100-20	CIRCUIT PLATE	1	
017	578-25007-20	INLET SCREEN	1	
018	575-25140-80	PUMP BODY COMP.	1	
019	475-25001-20	DIAPHRAGM GASKET	1	
020	474-25001-80	METERING DIAPHRAGM COMP.	1	
021	476-25004-20	DIAPHRAGM COVER	1	
022	548-25101-20	SET SCREW	4	

S01 07	TCP-25B CARBURETOR (SERIAL NO.B045601-)

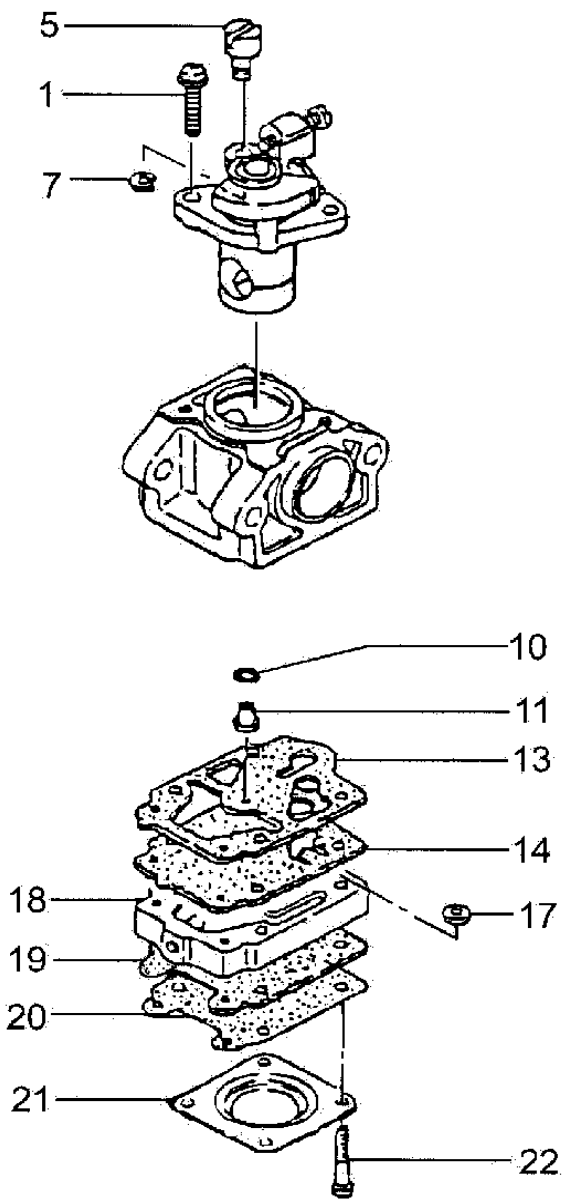

Parts List

Ref.	Part No.	Description	Q'ty	Serial No.
001	548-25140-20	THROTTLE SET SCREW	2	
005	539-25120-20	SWIVEL	1	
007	489-25100-20	STOP RING	1	
010	550-25100-20	O-RING	1	
011	599-2000W-40	MAIN JET #40	1	
013	577-25100-20	PUMP GASKET	1	
014	576-25100-20	PUMP DIAPHRAGM	1	
017	578-25007-20	INLET SCREEN	1	
018	575-25152-80	PUMP BODY COMP.	1	
019	475-25038-20	DIAPHRAGM GASKET	1	
020	474-25001-80	METERING DIAPHRAGM COMP.	1	
021	476-25004-20	DIAPHRAGM COVER	1	
022	548-25101-20	SET SCREW	4	

S01 08	TCP-25B PUMP-1

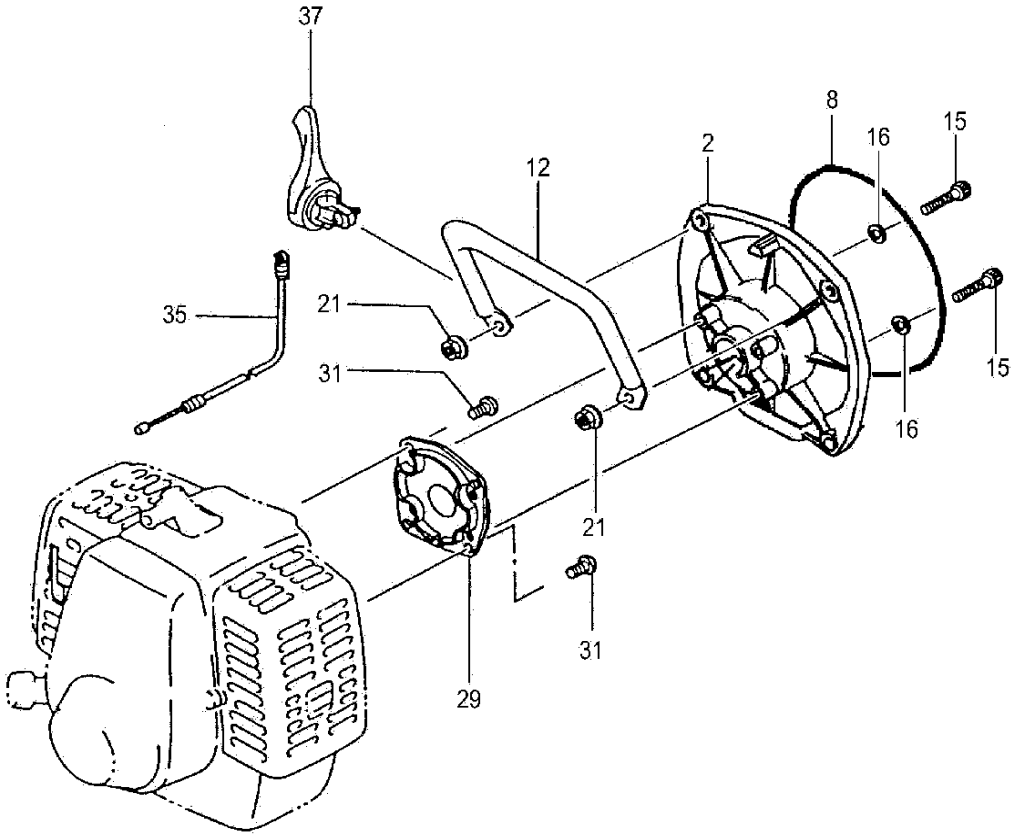

Parts List

Ref.	Part No.	Description	Q'ty	Serial No.
002	300-31249-20	END PLATE A	1	
008	999-67140-010	O-RING G140	1	
012	090-31249-20	HANDLE A	1	
015	990-21050-250	BOLT 5X25	4	
016	370-31249-20	WASHER A	4	
021	991-83080-001	FLANGE NUT 8	2	
029	333-0650A-20	COUPLING FLANGE	1	
031	994-14060-161	SCREW 6X16/S	4	
035	885-0650A-80	THROTTLE WIRE COMP. 4T	1	
037	870-02201-91	THROTTLE LEVER, 16 DIA.	1	

S01 09	TCP-25B PUMP-2

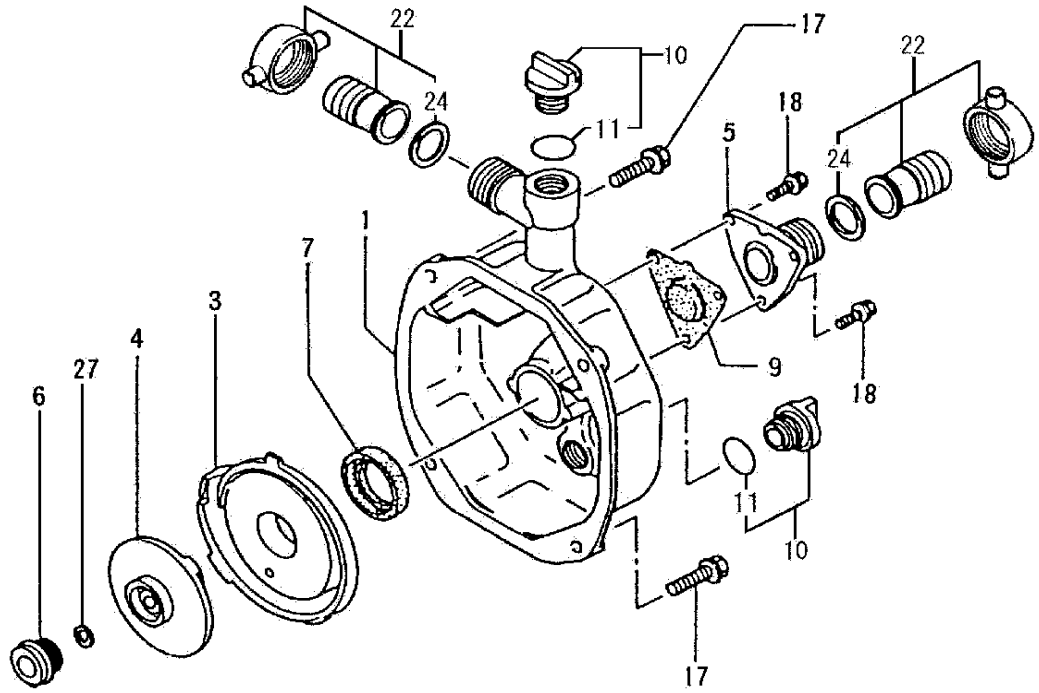

Parts List

Ref.	Part No.	Description	Q'ty	Serial No.
001	330-31249-20	CASING A	1	
003	310-31249-20	VOLUTE CHAMBER A	1	
004	031-31249-20	IMPELLER A	1	
005	320-31249-20	SUCTION PLATE A	1	
006	160-31249-90	MECHANICAL SEAL ASS'Y A	1	
007	311-31249-20	VOLUTE CHAMBER GASKET A	1	
009	350-31249-80	SUCTION PALTE PACKING	1	
010	360-31249-20	PRIMER PLUG	2	
011	999-67024-000	O-RING, P-24	2	
017	994-51080-350	FLANGE BOLT 8X35	4	
018	994-51060-160	FLANGE BOLT 6X16	3	
022	050-31249-90	COUPLING ASS'Y	2	
024	054-31249-20	COUPLING PACKING	2	
027	034-31249-20	IMPELLER SHAFT SHIM A 0.3	V	

S01 10	TCP-25B BED/OPTINAL PARTS

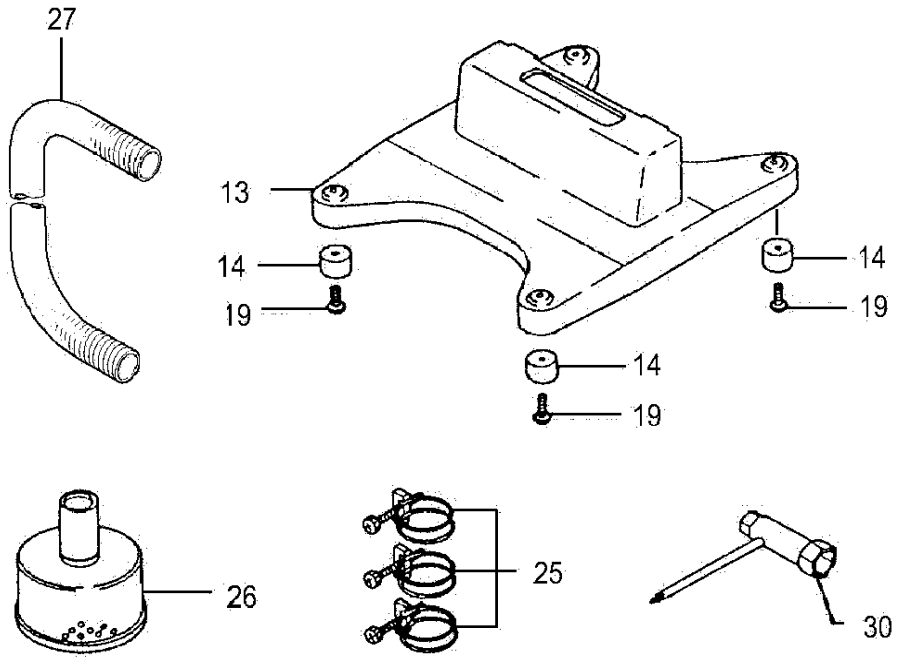

Parts List

Ref.	Part No.	Description	Q'ty	Serial No.
013	080-31249-20	BED A	1	
014	312-31249-20	CUSHION RUBBER A	4	
019	993-11051-402	TAPPING SCREW 5X14	4	
025	132-31249-20	WIRE BAND A 25	3	
026	100-31249-80	FILTER COMP. A	1	
027	180-31251-20	SUCTION HOSE A 3M	1	
030	829-20000-80	COMBI BOX SPANNER 13X19 ,PLUS	1	